Optimizing a Threadmill Program

For Hand-Written G and M Code

Preview

- Single Pass Program
- Utilizing Incremental Positioning (G91)
- Calculating Threadmilling Feed Rates
- 2 and 3 Pass Programs
- Utilizing Cutter Compensation
- Implementing Subroutines

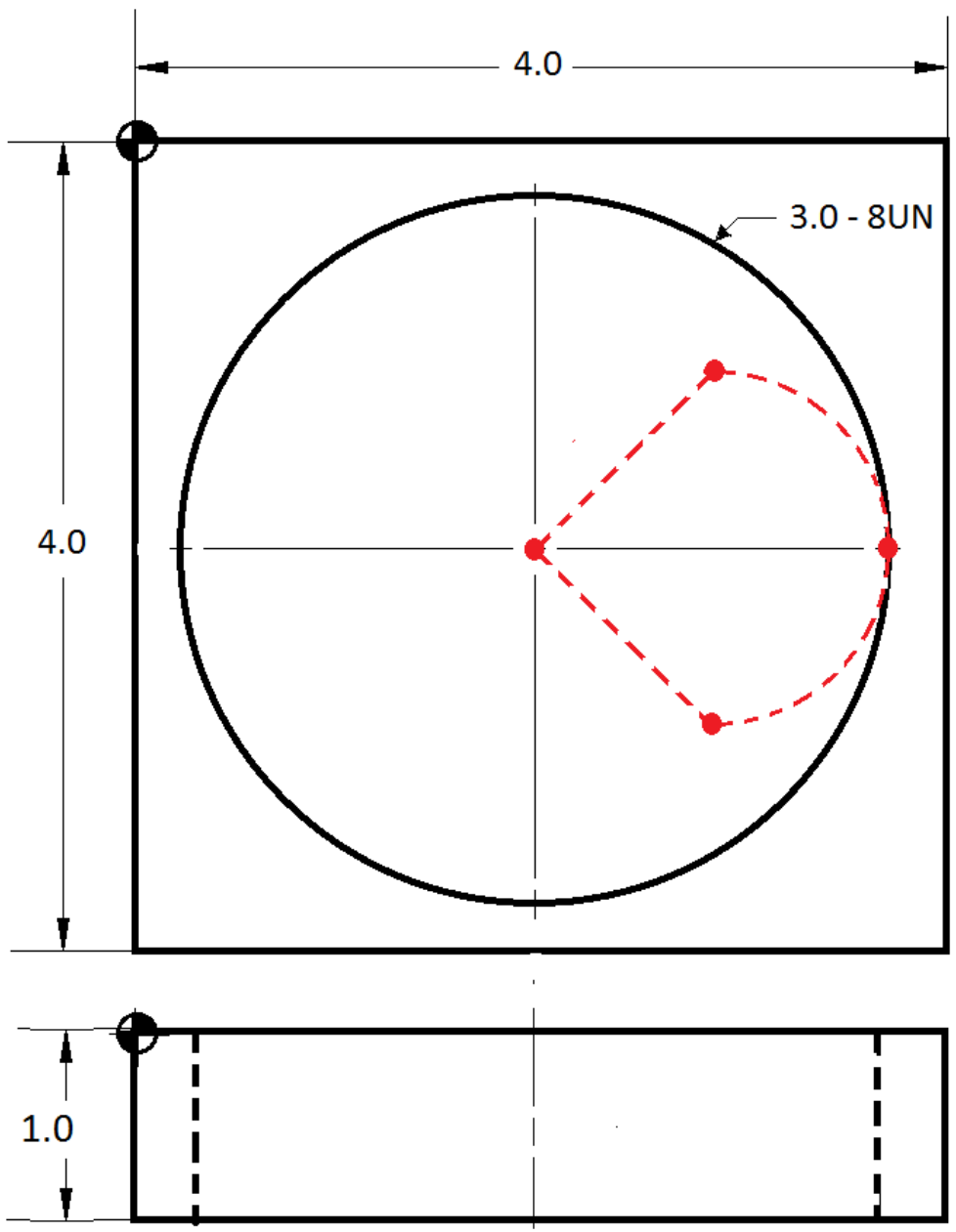


```
%
O23354 ( Threadmill 3.0 - 8UN)
G90 G20 G54 G40 G49 G80 G17
T01 M06 (1.0 DIA Threadmill)
G43 H01
S4600 M03
```

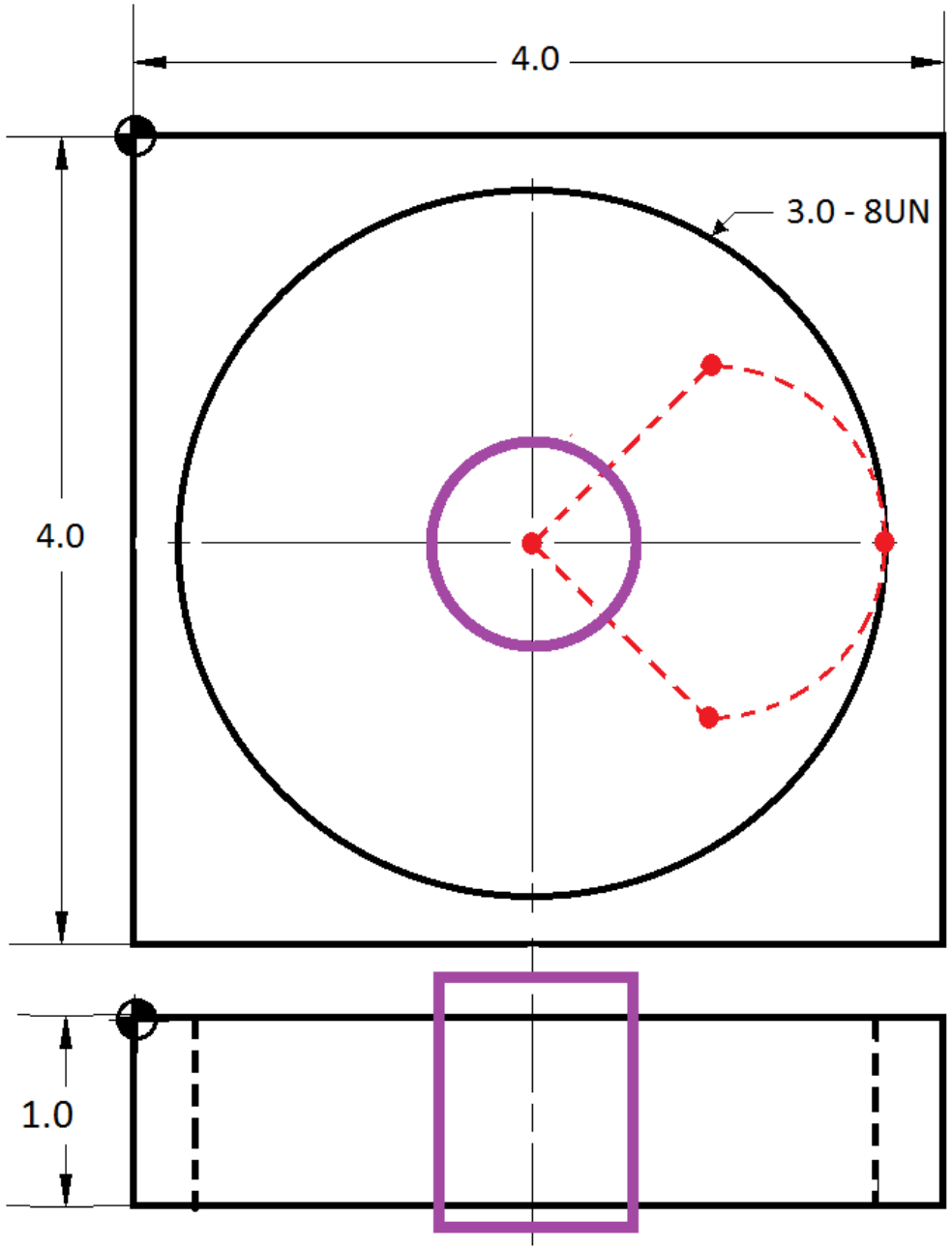


```
%
O23354 ( Threadmill 3.0 - 8UN)
G90 G20 G54 G40 G49 G80 G17
T01 M06 (1.0 DIA Threadmill)
G43 H01
S4600 M03
G00 X2.0 Y-2.0
Z1.0
Z.1
G01 Z-1.05 F50.0
```

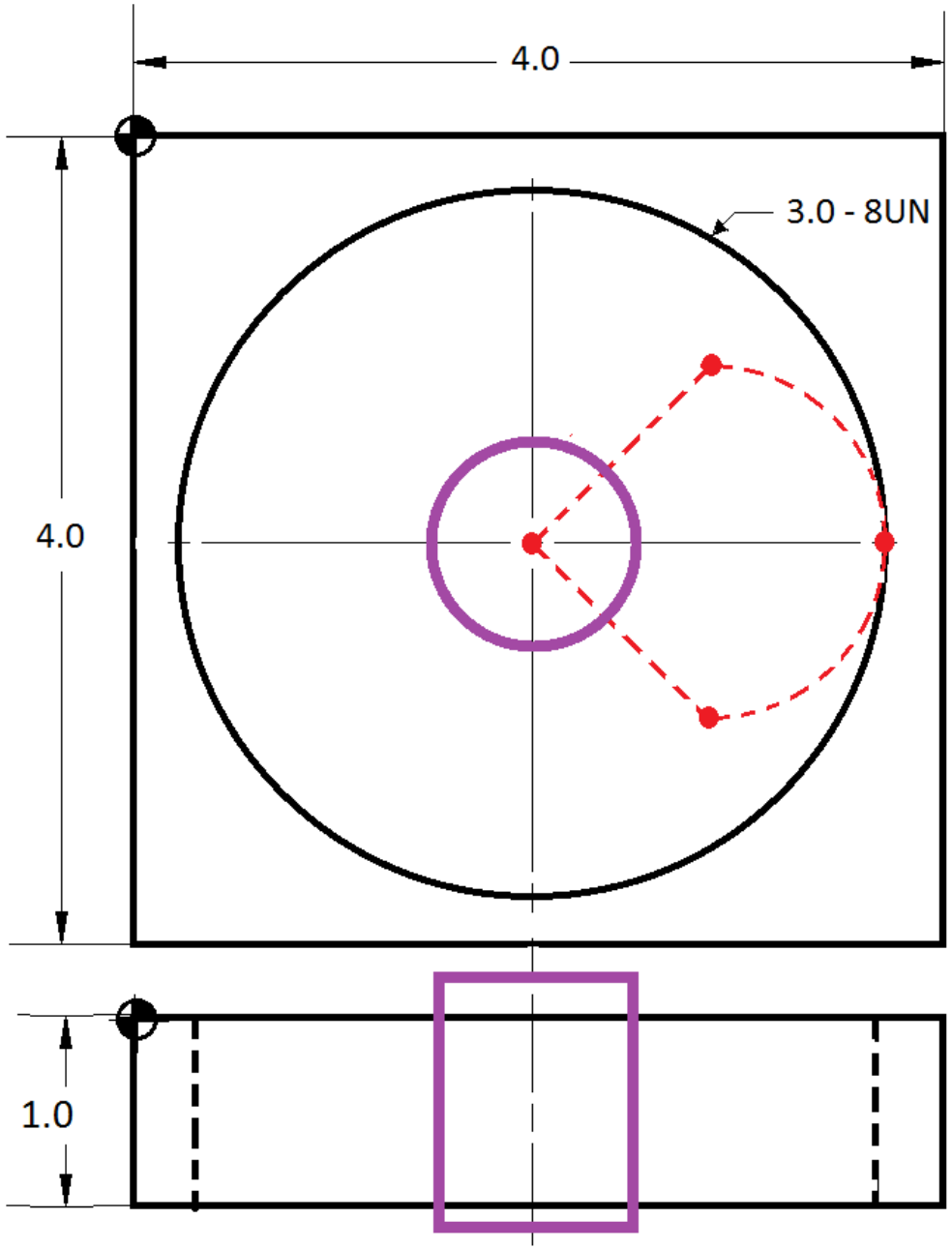

Feeding Z in the - direction to position it to mill upward in the counterclockwise (Climbmill) direction.

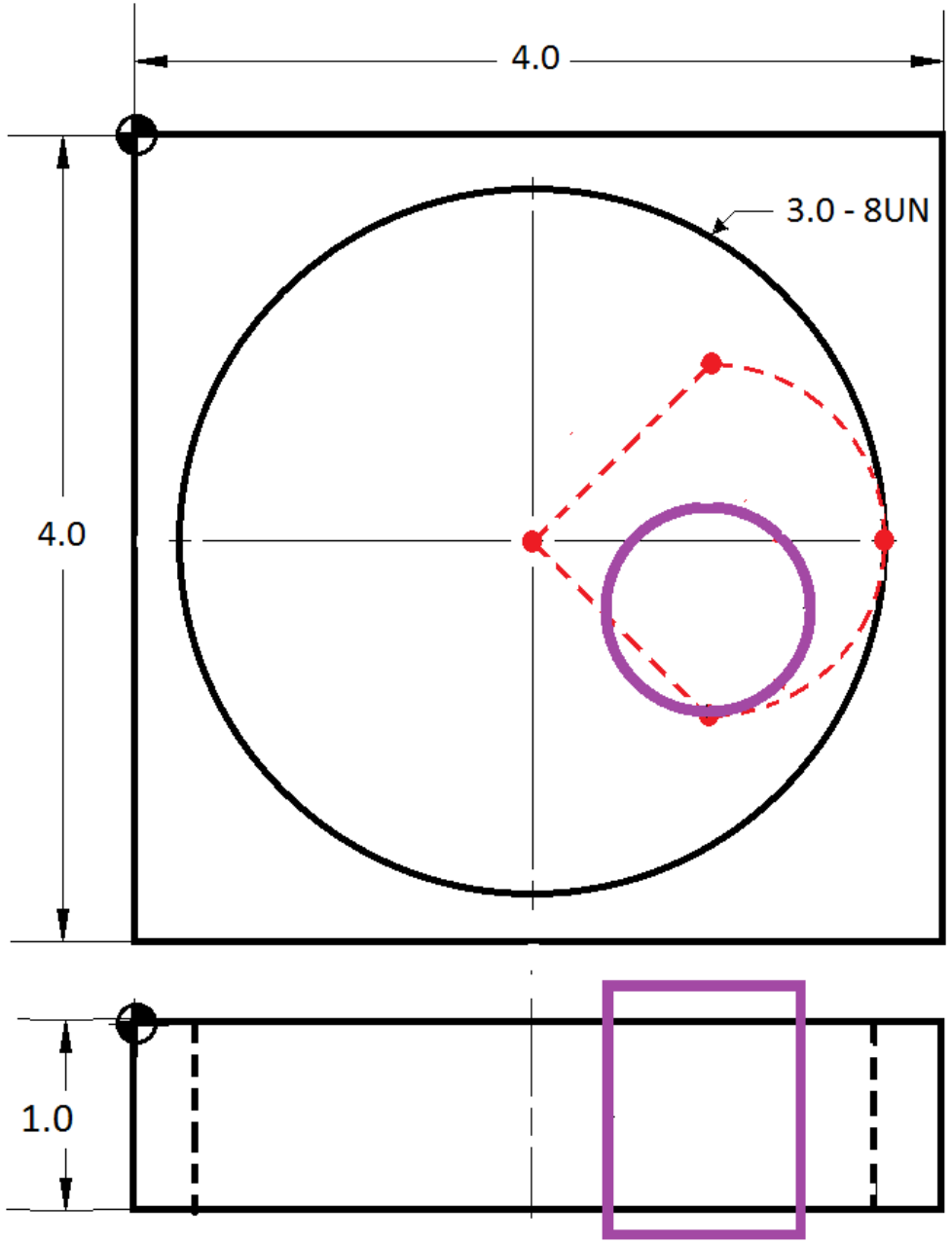


```
%
O23354 ( Threadmill 3.0 - 8UN)
G90 G20 G54 G40 G49 G80 G17
T01 M06 (1.0 DIA Threadmill)
G43 H01
S4600 M03
G00 X2.0 Y-2.0
 Z1.0
 Z.1
G01 Z-1.05 F50.0
M08
G91 G41 D01  X.75 Y-.75
```

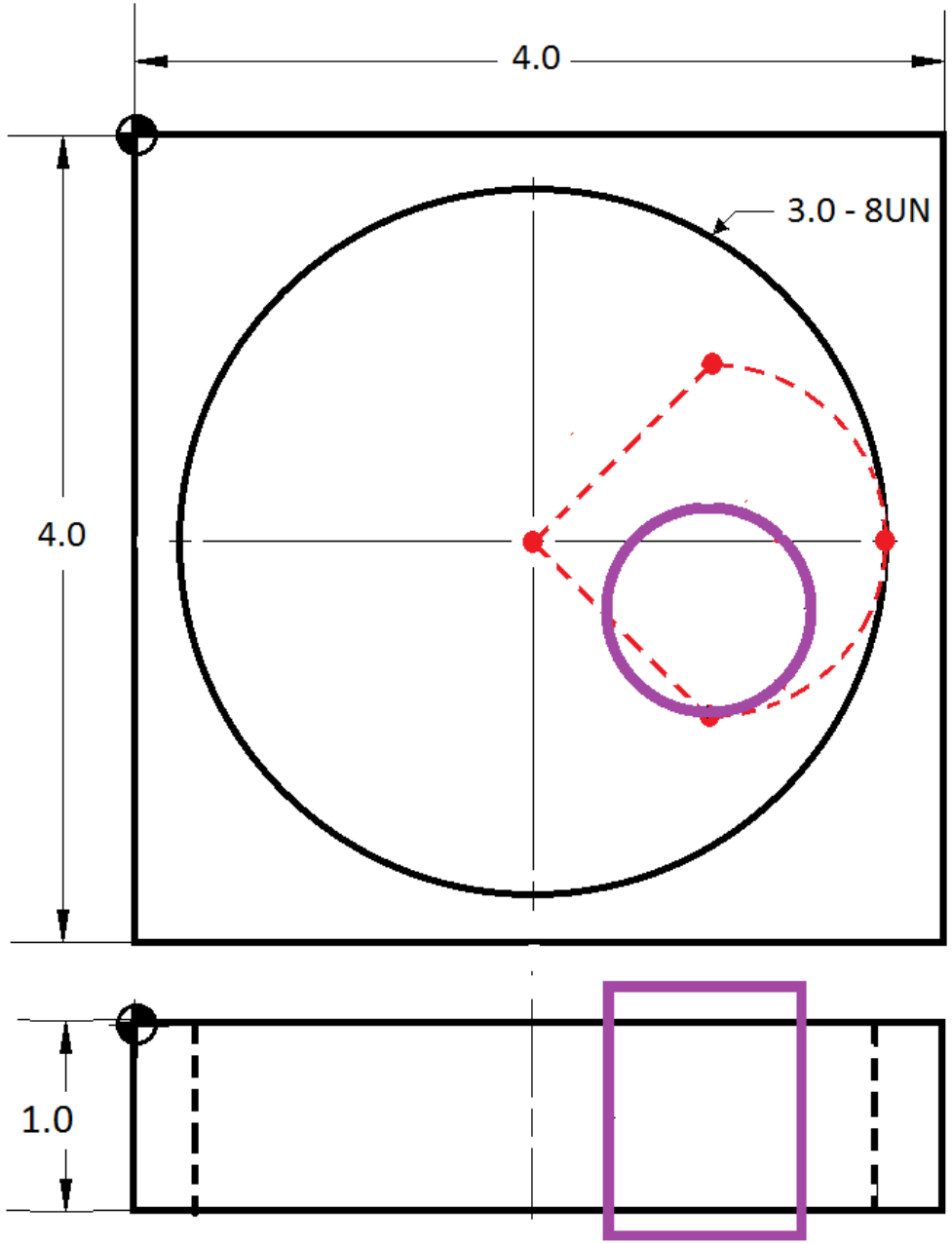

Postioning the tool at -45 DEG for 2 reasons.

1) Activate Cutter Compensation

2) Postion it at a point to begin a radius into the part.

Point Postioning = Circle Radius/2 in the X+ and Y- Direction

Incremental postioning (G91) for ease of programmimng

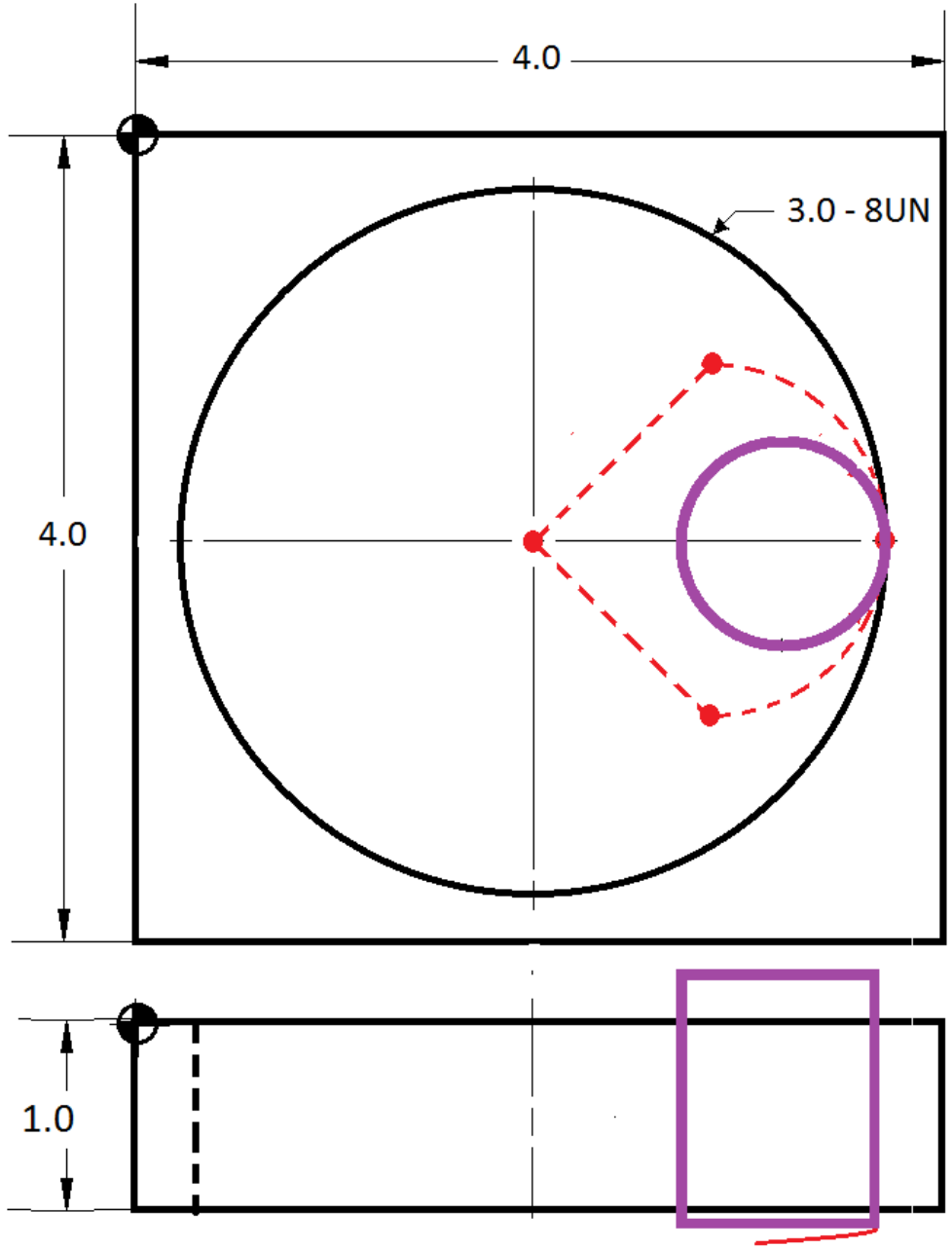


```
%
O23354 ( Threadmill 3.0 - 8UN)
G90 G20 G54 G40 G49 G80 G17
T01 M06 (1.0 DIA Threadmill)
G43 H01
S4600 M03
G00 X2.0 Y-2.0
Z1.0
Z.1
G01 Z-1.05 F50.0
M08
G91 G41 D01 X.75 Y-.75
G03 X.75 Y.75 Z.0156 R.75 F14.0
```

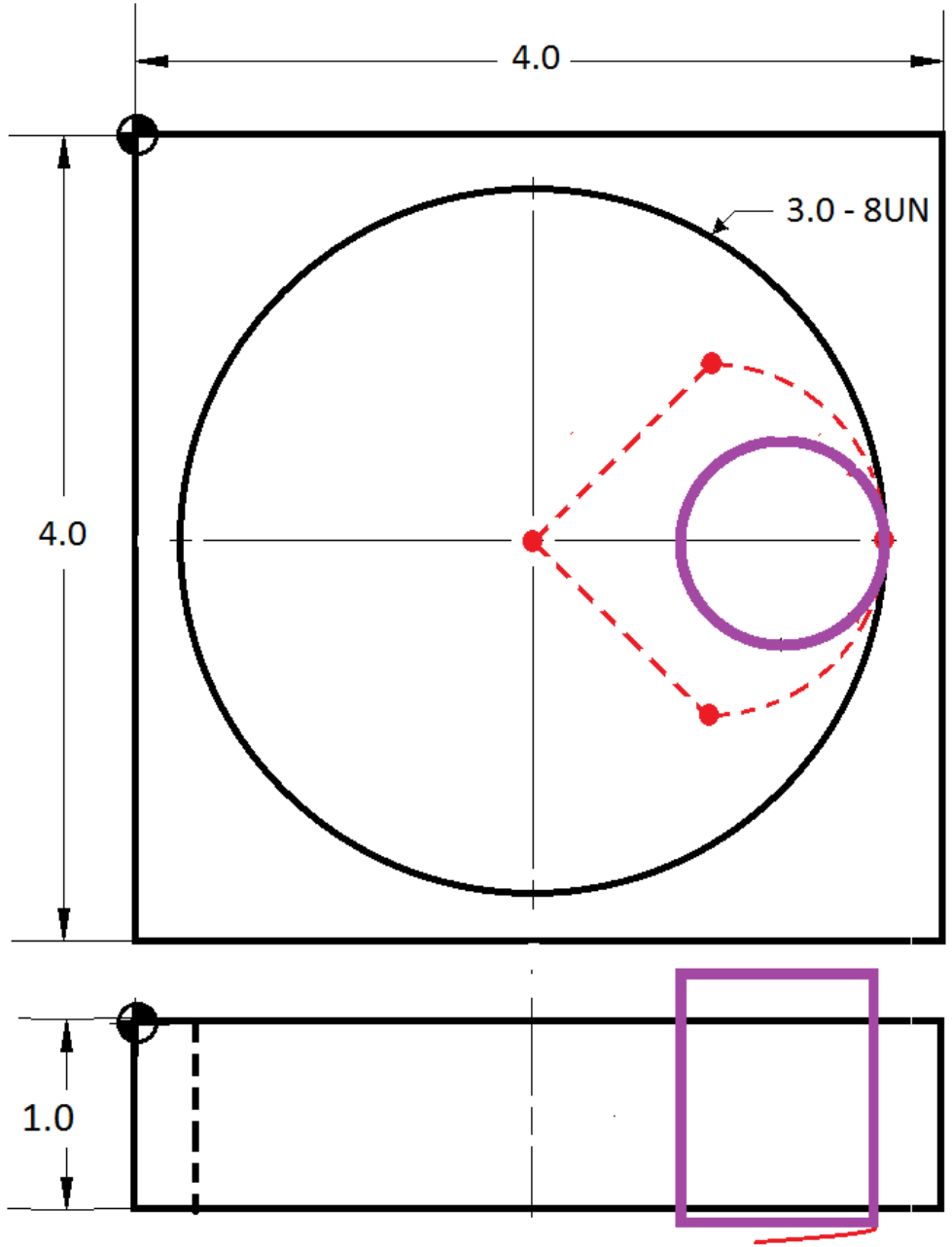

Start Z+ helix motion as the tool arcs into the material

Z = Thread Pitch / 8
Z = .0156

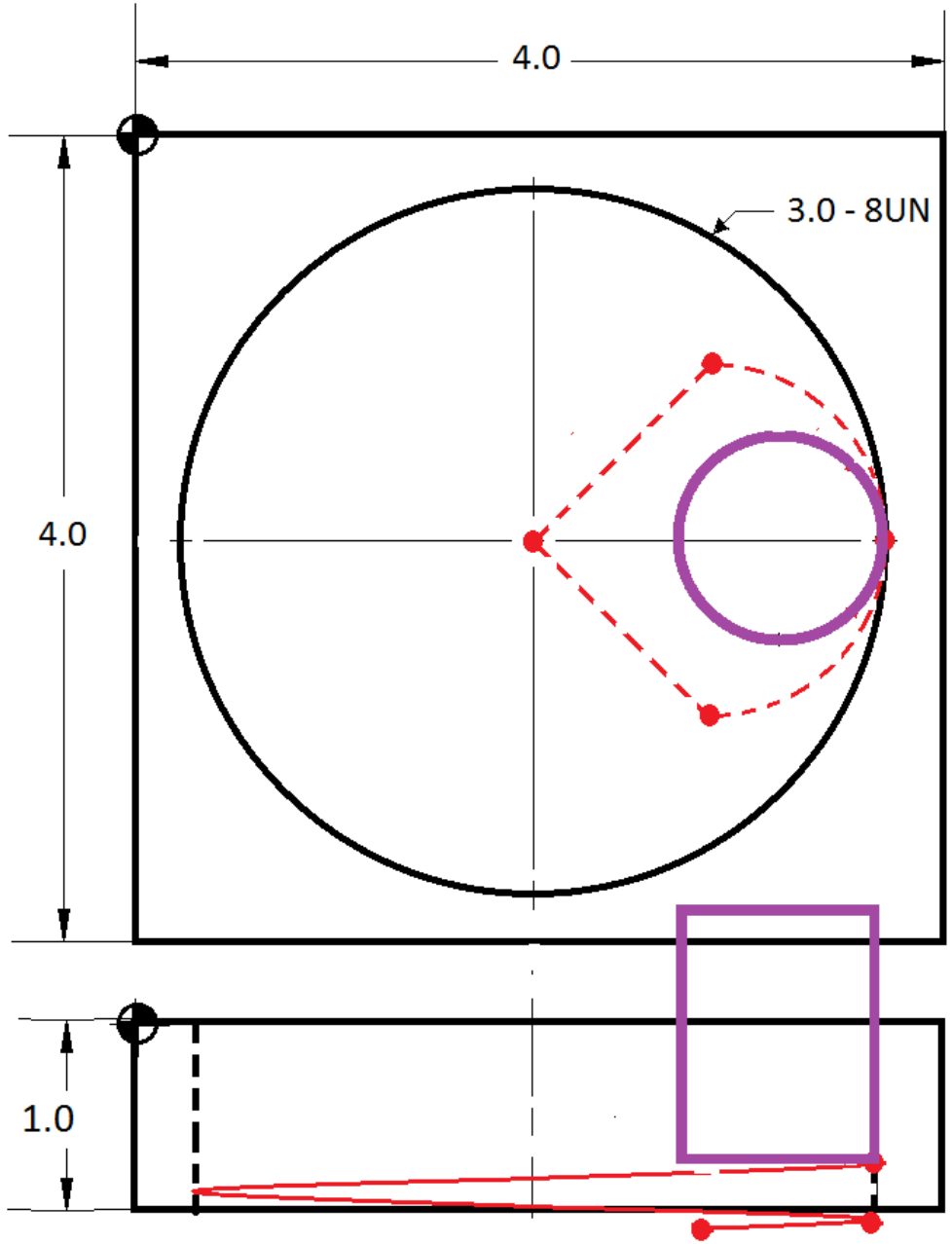

Z = Thread Pitch
Z = 1/8
Z = .125

```
%
O23354 ( Threadmill 3.0 - 8UN)
G90 G20 G54 G40 G49 G80 G17
T01 M06 (1.0 DIA Threadmill)
G43 H01
S4600 M03
G00 X2.0 Y-2.0
 Z1.0
 Z.1
G01 Z-1.05 F50.0
 M08
G91 G41 D01 X.75 Y-.75
G03 X.75 Y.75 Z.0156 R.75  F14.0
G03 X0.0 Y0.0 Z.125 I-1.5 J0.0
```

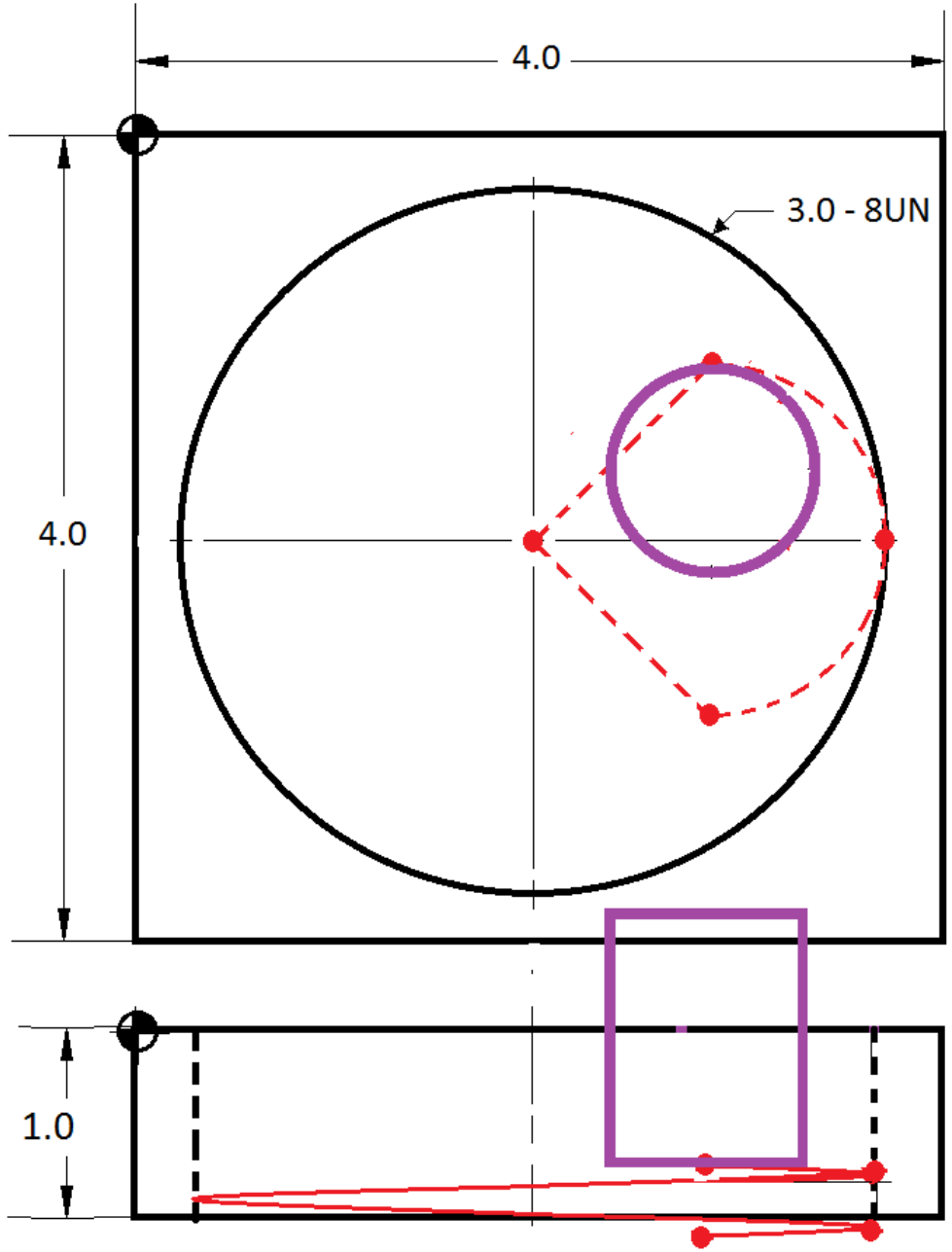

Continue the Z+ helical motion while arcing out the material.

Tool positioning is similar to arcing into the material except in the X- Y+ direction

```
%
O23354 ( Threadmill 3.0 - 8UN)
G90 G20 G54 G40 G49 G80 G17
T01 M06 (1.0 DIA Threadmill)
G43 H01
S4600 M03
G00 X2.0 Y-2.0
 Z1.0
 Z.1
G01 Z-1.05 F50.0
M08
G91 G41 D01 X.75 Y-.75
 G03 X.75 Y.75 Z.0156 R.75  F14.0
 G03 X0.0 Y0.0 Z.125 I-1.5 J0.0
 G03 X-.75 Y.75 Z.0156 R.75
```

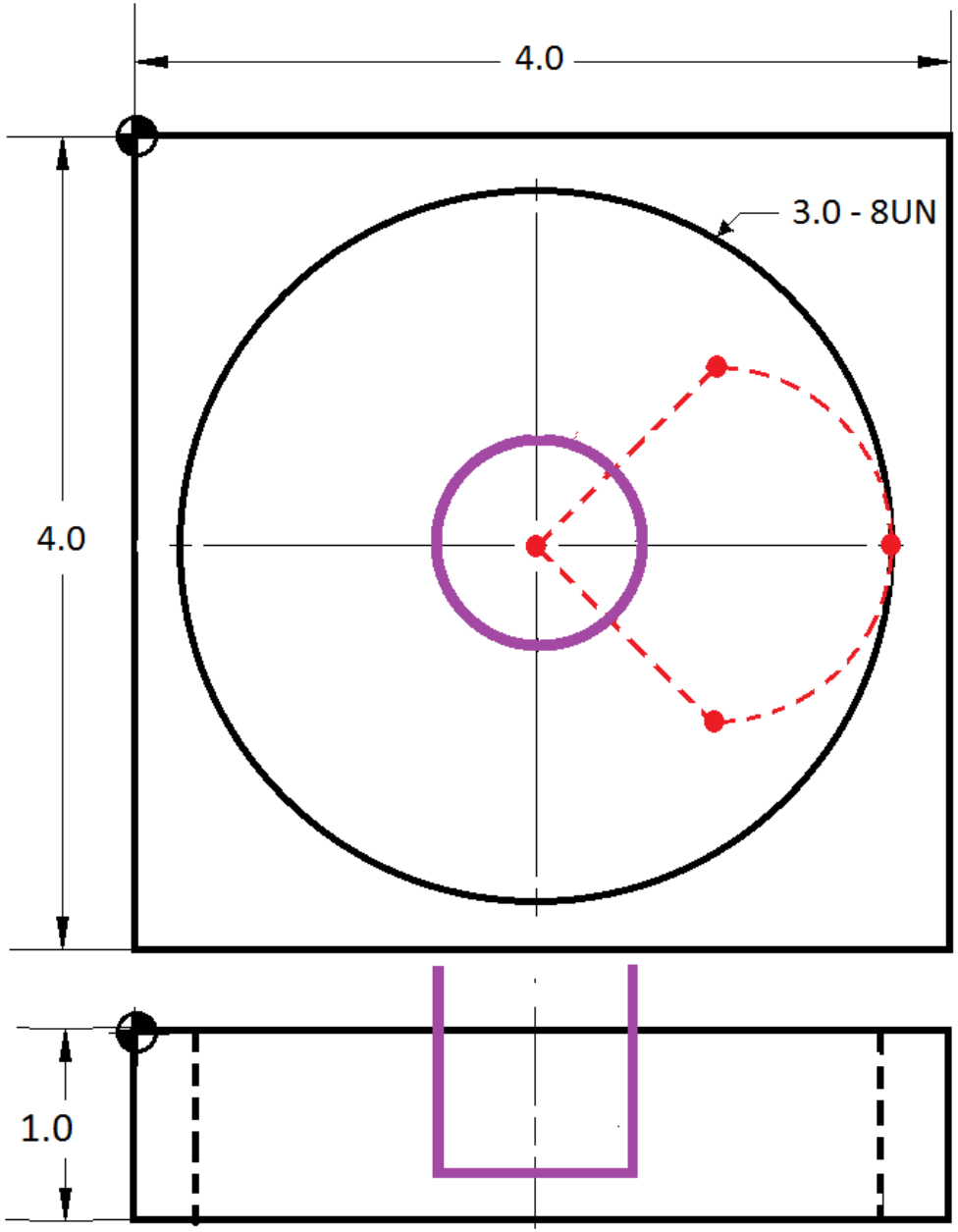

Position the tool to the center of the circle while canceling cutter compensation and activation absolute positioning (G90)

```
%
O23354 ( Threadmill 3.0 - 8UN)
G90 G20 G54 G40 G49 G80 G17
T01 M06 (1.0 DIA Threadmill)
G43 H01
S4600 M03
G00 X2.0 Y-2.0
Z1.0
Z.1
G01 Z-1.05 F50.0
M08
G91 G41 D01 X.75 Y-.75
G03 X.75 Y.75 Z.0156 R.75 F14.0
G03 X0.0 Y0.0 Z.125 I-1.5 J0.0
G03 X-.75 Y.75 Z.0156 R.75
G90 G40 G01 X2.0 Y-2.0 F50.0
```

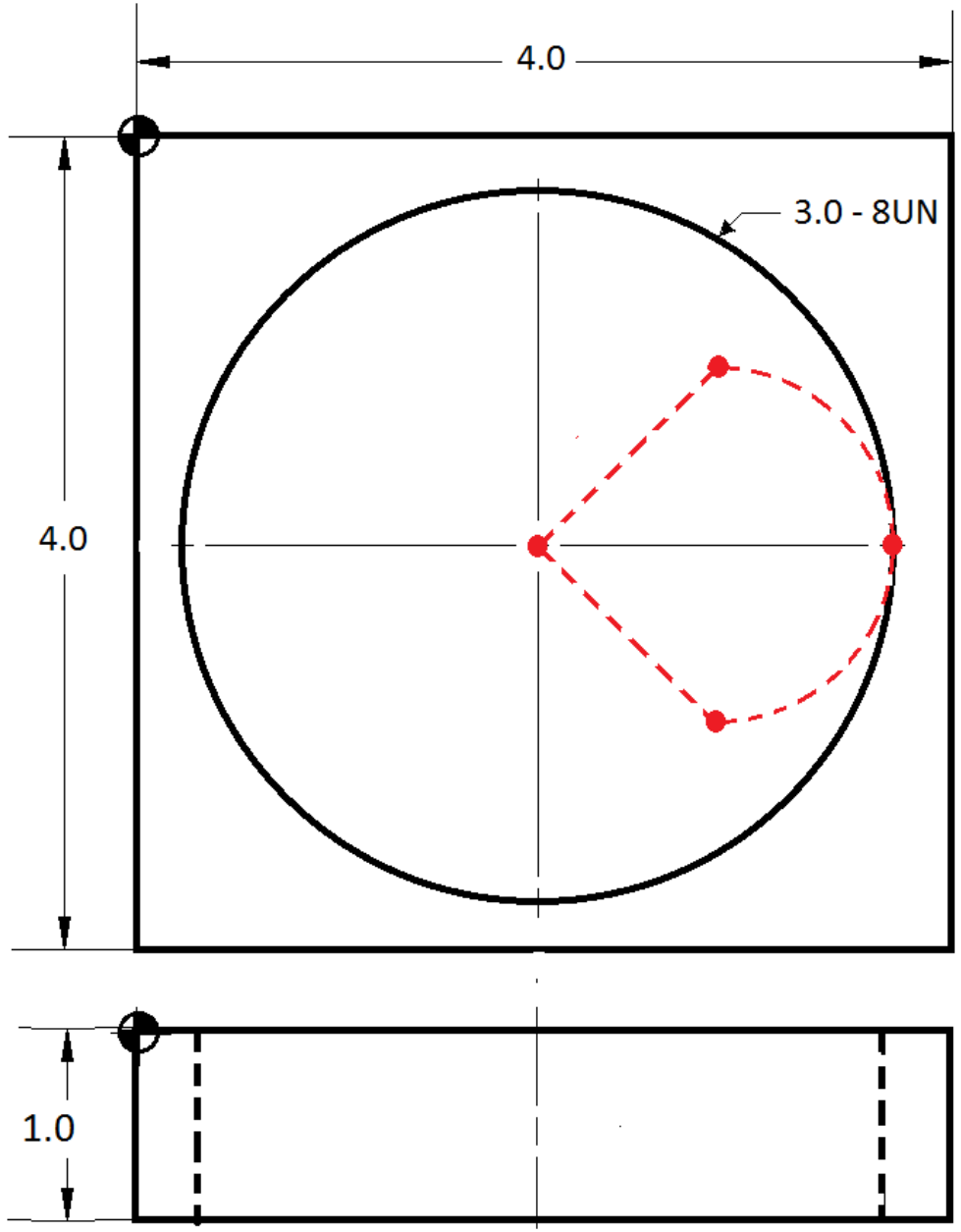


```
%
O23354 ( Threadmill 3.0 - 8UN)
G90 G20 G54 G40 G49 G80 G17
T01 M06 (1.0 DIA Threadmill)
G43 H01
S4600 M03
G00 X2.0 Y-2.0
 Z1.0
 Z.1
G01 Z-1.05 F50.0
M08
G91 G41 D01 X.75 Y-.75
 G03 X.75 Y.75 Z.0156 R.75  F14.0
 G03 X0.0 Y0.0 Z.125 I-1.5 J0.0
 G03 X-.75 Y.75 Z.0156 R.75
 G90 G40 G01 X2.0 Y-2.0 F50.0
 Z.1 M09
 G00 Z1.0 M05
 G49
 G53 Y0.0 Z0.0
 M30
%
```

Threadmilling Feedrate

- Threadmill Feedrate = [(Major DIA – Tool DIA) / Major DIA] X Linear Feedate
- Threadmill Feedrate = [(3.0 – 1.0) / 3.0] X 21.0
- Threadmill Feedrate = 14.0

```
%
O23345
(Threadmill 3.0 - 8 hole)
G90 G20 G54 G49 G40 G80 G17 G28
T01 M06 (1.000 DIA 8 Pitch Threadmill)
G43 H03
S4600 M03
G00  X2.0 Y-2.0
Z1.0
G01  Z-1.05  F50.0  M08

(Pass #1)
(D31 - 1.070)
G91 G01  G41 D31 X.75 Y-.75
M97 P10

(Pass #2)
(D21 - 1.029)
G91 G01 G41 D21 X.75 Y-.75
M97 P10

(Pass #3)
(D01 - 1.000)
G91 G01  G41 D01 X.75 Y-.75
M97 P10

G00 Z1.0 M09
M05 G49
G53 Y0.0 Z0.0
M30
```

```
( Sub Routine)
N10
G03 X.75 Y.75 Z.0156 R.75  F14.0
G03 X0.0 Y0.0 Z.125 I-1.5 J0.0
G03 X-.75 Y.75 Z.0156 R.75
G90 G01 G40 X2.0 Y-2.0 F50.0
G01 Z-1.05
M99
%
```

Formulas for Determining Tool Offsets

For 3 passes:

1st Pass Offset = (.5638 X Lead) + Tool Diameter

= (.5638 X .125) + 1.000

= $\boxed{1.070}$

2nd Pass Offset = (.235 X Lead) + Tool Diameter

= (.235 X.125) + 1.000

= $\boxed{1.029}$

3rd Pass Offset = Actual Tool DIA

For 2 passes:

1st Pass Offset = (.35 X Lead) + Tool Diameter

2nd Pass Offset = Tool Diameter